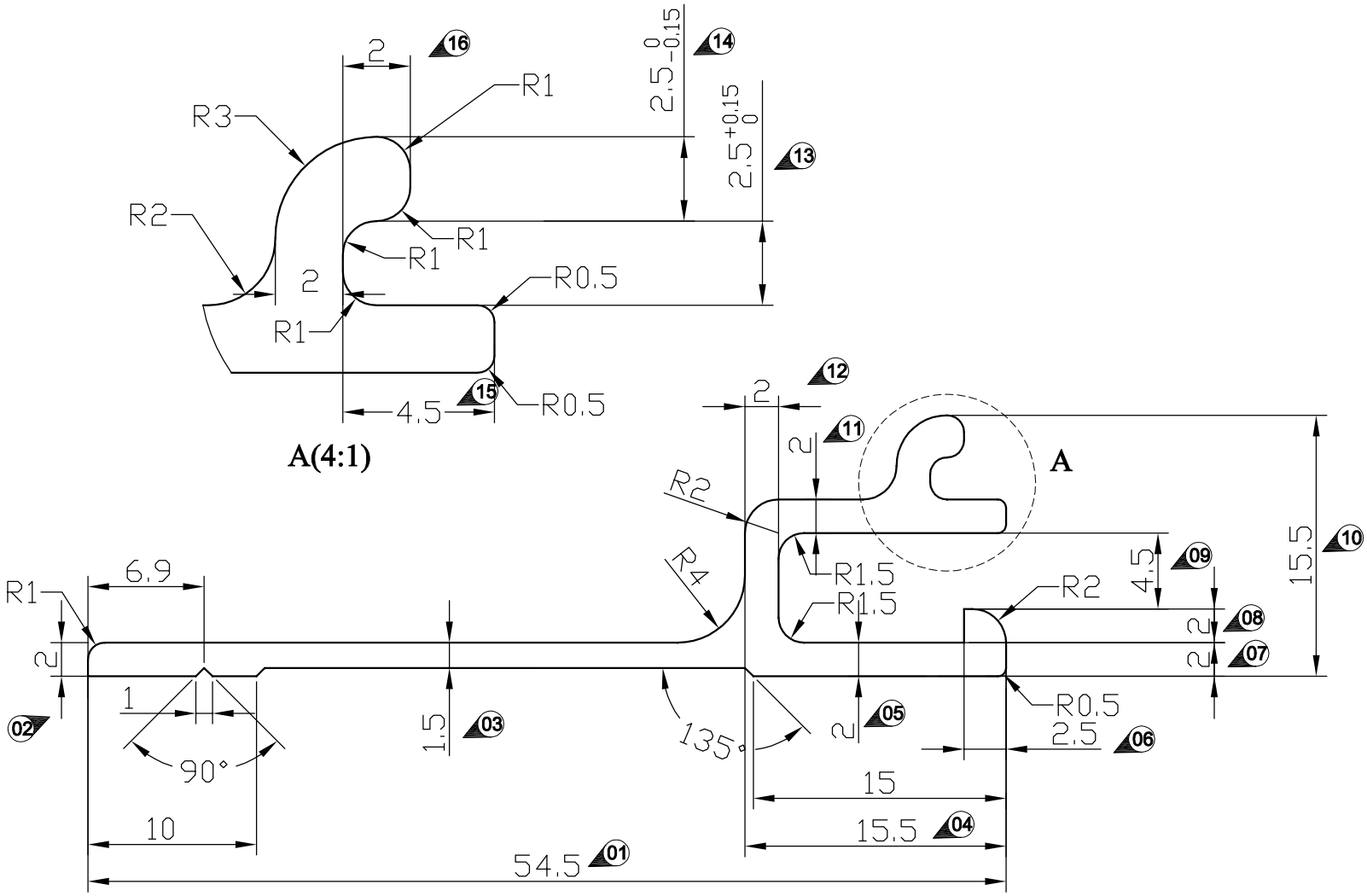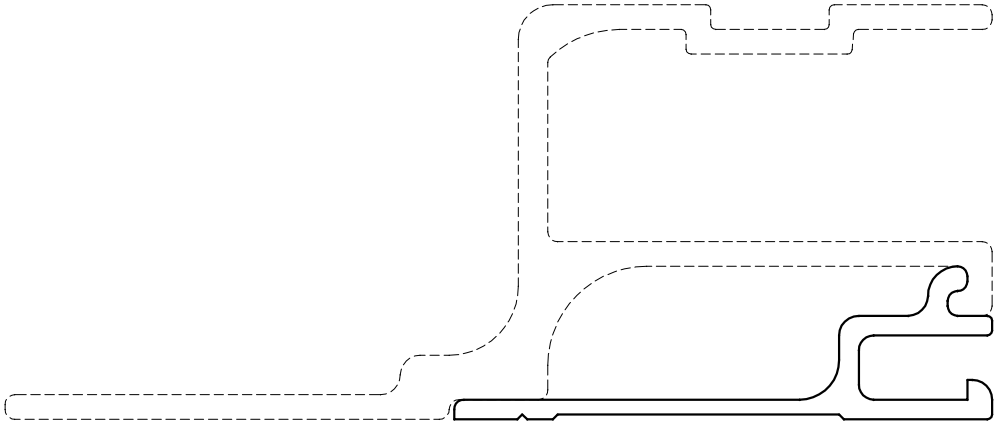
A(4:1)
A
R1
R2
R3
R0.5
R1.5
R4
2
4.5
6.9
1
1.5
90°
135°
10
15
15.5
54.5
2.5
15.5
01
02
03
04
05
06
07
08
09
10
11
12
13
14
15
16